环保物料

Reference Informations:
*Used in 22505 series Housing

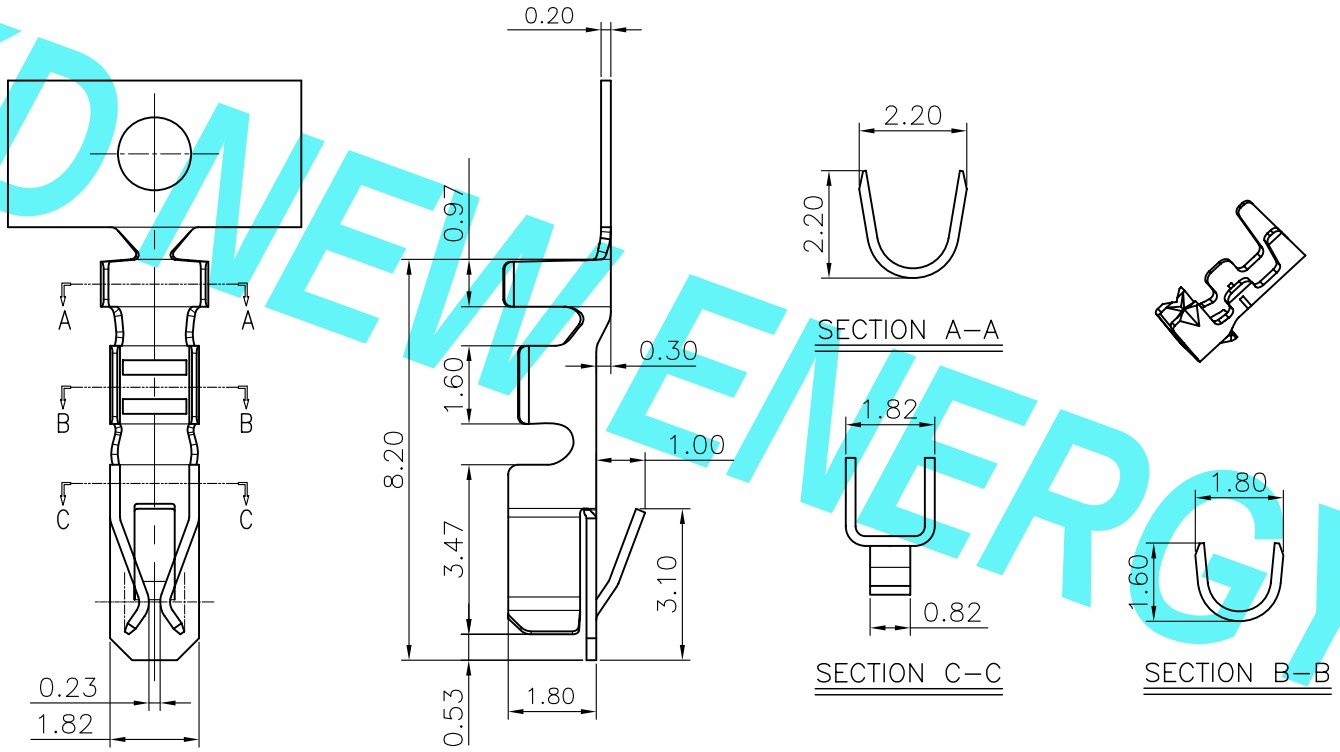

KD NEW ENERGY

Ordering Information & Specifications

Unit: mm

Part No	Wire Range	Insulation O.D.	Material	Finish	Qty/reel
22504T0P-**	AWG#22-#28	1.70mm(max)	Phosphor Bronze	Au or Sn	10,000pcs

				GENERAL TOLERANCES		SCALE: 1:1	NAME	DATE	东莞市康导新能源科技有限公司 DONGGUANG KD NEW ENERGY TECHNOLOGY CO.,LTD
				LINEAR	ANGLES	APPROVED			公司网址：www.dgconne.cn 公司电话：0769-85337633 邮 箱：2850175986@qq.com 公司传真：0769-85392827
				0.0±0.25	X° REF±6°	DESIGNER			TITLE: 2.50mm pitch Crimp Terminal
A0	新图面发行	2018.07.28	UNIT: MM	0.00±0.15	X° ±3°	DRAWN	肖丽娟	2018.07.28	
REV.	REVISION RECORD	DATE	SIZE: A4	0.000±0.08	X° X'±2°				

PART. NO: 22505T0P-**

DWG. NO: ENDE05

REV: A0 SHEET: 1/1